Study the sketch of the part shown below and try to imagine it as a three dimensional object. With the 3D image of the object in mind, visualize the front, top, and right side views.

Sketch the three views on a sheet of graph paper provided.
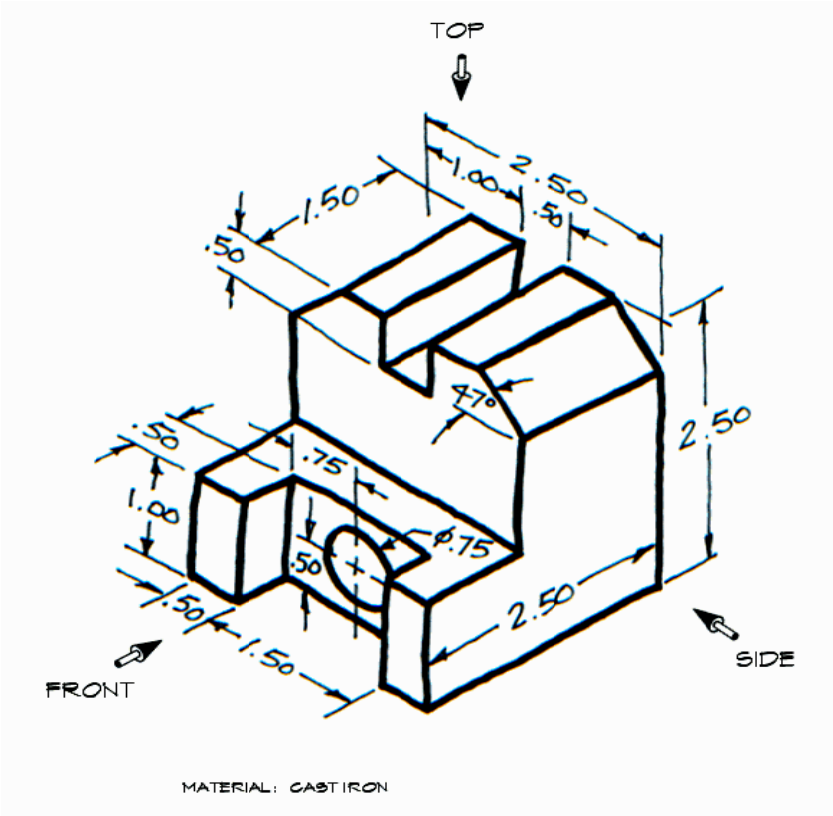
NOTE: Each square on the graph paper = 1/8th inch.